G.K. 115 CATHODE RAY OSCILLOSCOPE
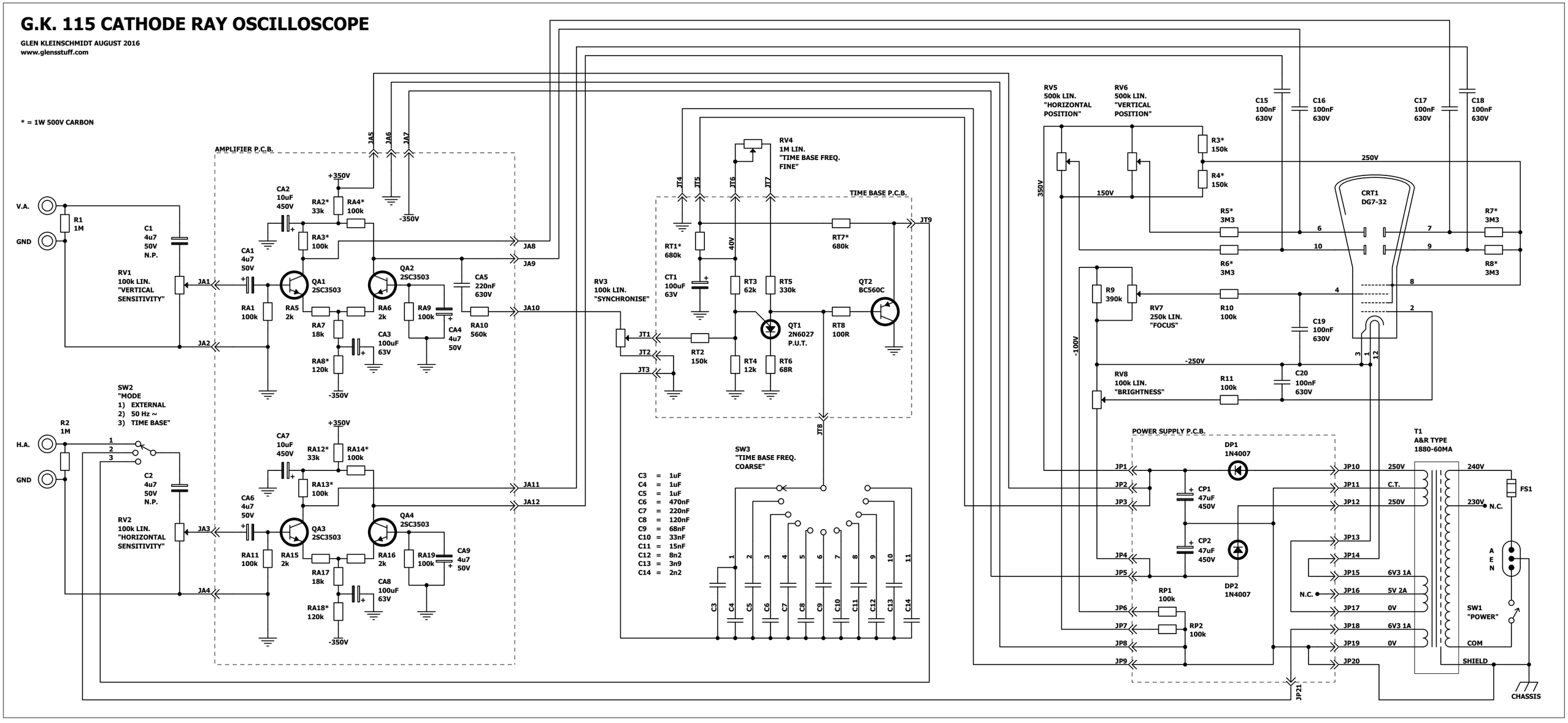
GLEN KLEINSCHMIDT AUGUST 2016
www.glensstuff.com